Design Guidelines for Using Distillation Simulation Software in the Field

Karl Kolmetz
KLM Technology Group

Asit Mardikar
Harpreet Gulati
Invensys Process Systems (SimSci-Esscor)

Dr Wai Kiong Ng
Tau Yee (Ron) Lim
Institute of Chemical and Engineering Sciences

Phaik Sim Cheah
Titan Petrochemicals

Invensys Process Systems Users Conference

Swissotel Le Concorde Hotel
Bangkok, Thailand
7th – 9th December 2005

Introduction

Process simulation is a powerful chemical engineering tool that has widespread use in the chemical processing industry. Used correctly it can help design, optimize and troubleshoot process units, when you follow guidelines developed from the fundamental basics of chemical engineering. It is important to remember that computer hardware advancements have only improved the speed of the calculation. Despite rapid progress in computational speed and user friendly interfaces, understanding the rules and limitations of simulation tools is still a pre-requisite to obtain simulated results close to those measured in the field. The engineer must supply the correct input data, interpret errors that occurred and make critical judgment on the results. Mastering these techniques often requires substantial field experience and practice.

Accumulating such knowledge in the form of design guidelines helps young engineers to ramp up their learning curves. Working steps like correct selection of actual field efficiencies, choosing appropriate vapor and liquid equilibrium (VLE) methods, feed characterization, and analysis of actual hydraulic behavior all have a strong influence on the accuracy of the model's results. Developing guidelines for each of these steps is very important to a practicing engineer.

Ethylene DePentanizer

An Ethylene producer in Malaysia wished to convert a Gasoline Hydrotreater (GHU) Stabilizer Column to a DePentanizer Column service. The Stabilizer Column was designed to remove C4s and lighter hydrocarbons. They now wished to remove C5s and lighter hydrocarbons, while minimizing benzene loss in the overhead.

The original Column had 28 sieve deck trays, with a bottom diameter of 1.8 meters, and a top diameter of 1.0 meters. The original design feed rate was 16,155 tons/hr with a bottoms specification of 1.0% C4s and lighter.

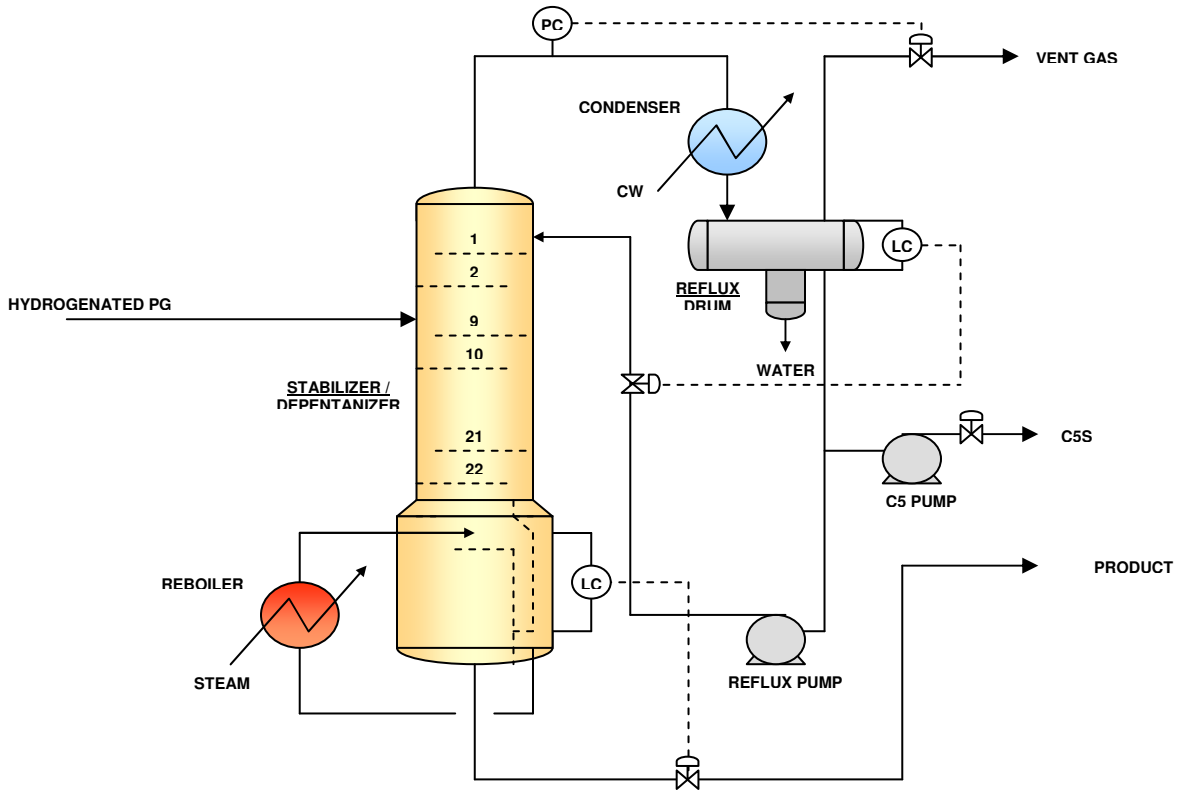

Figure 1 Original Configuration

A good place to start in a revamp would be to research similar successful and unsuccessful distillation column revamps. There are over 900 published cases of unsuccessful distillation operations. (1) It is a very good idea to have a "ball park range" of what the correct answer should be before you begin to simulate to prevent the 901st case.

Many successful DePentanizers have about 38 - 45 trays. Average tray efficiency has been about 75 - 85%. For our design case we used 70%, leaving some safety in the simulation design. There are many short cut methods to establish number of trays and reflux ratios based on relative volatilities of the light and heavy keys.

A second step in a revamp might be to simulate the original heat and material balance provided by the licensor, and the then the current unit operation. The current unit operation may need a test run with data analysis to develop an accurate current heat and material balance. Most field flow meter accuracy is only +/- 2.0%.

If these two cases can be matched then one can use that tuned model to project the future cases. Without accurate models that match the original heat and material balance and current unit operation, future projections are a risky adventure.

Step three would be to use the tuned model to verify if the existing tower could be used, possibility by raising the reflux ratio, adjusting the pressure or other simple modifications. Step three is really has two parts. Part one would be to modify the tuned model, and then rate the tray hydraulics. In this case the client desired increased capacity and increased separation ability, which is difficult to achieve in an existing column. The existing column could not provide the increased capacity and separation. A design was developed utilizing the tuned SimSci-Esscor PRO/II model which met the desired capacity and separation.

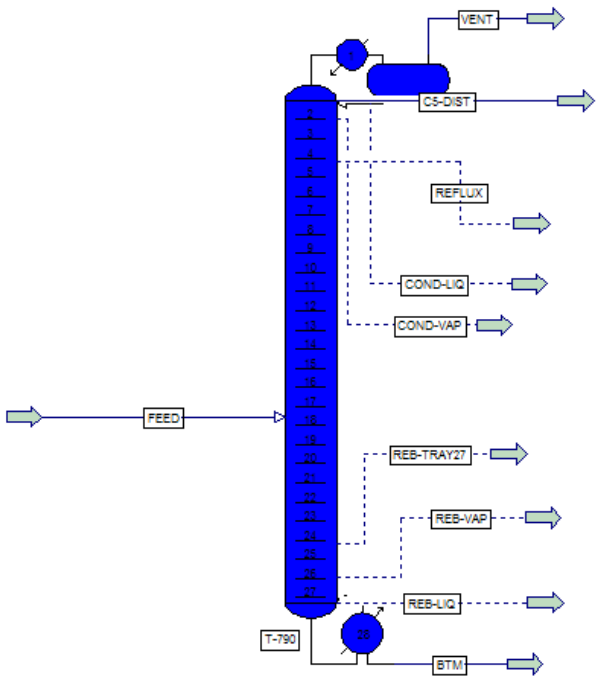

Figure 2
PRO/II Design Model

Tuned PRO/II models have been used to design many of the existing distillation columns in the world, due to their widespread use by the distillation equipment vendors. Distillation simulation experts will have 30 year databases of how tuned PRO/II models with specific VLE packages will operate in the field. These databases are very important when designing distillation columns. These databases are the reason that many distillation experts use PRO/II.

The proposed new tower design had 40 stages, with a 1.8 meter bottom diameter and a 1.2 meter top diameter due to the increase capacity and separation requirements.

Depentanizer Column (T-790)

	Old	New
Feed capacity	16,155 kg/hr	19,840 kg/hr
Distillate	C4+ Max 1.0%	Benzene Max. 0.1 wt.%
Bottom Product	N/A	C5+ Max. 1.0 wt%

When reviewing the design of new tray column hydraulics some guild lines include:

1. Max Recommended Jet Flood is 83% - at 83% jet flood there is about 95% confidence level – jet flood is a vapor limitation.
2. Max Recommended Down-comer Back up is 80% - downcomer back up is a liquid limitation.

Refinery Vacuum Tower

In October 2003, a major refining company in Southeast Asia approached us to provide a process study for a crude vacuum tower. The existing crude vacuum tower was equipped with grid packing at the wash bed section to reduce coking. This grid packing was in service for 8 years which is excellent for vacuum tower wash bed service. (7)

Typically the most challenging part of a vacuum column is the wash bed. The correct evaluation of the entrainment, also called overflash, is very important. The correct evaluation establishes the correct wash bed liquid distribution rate, keeping the packing wet to reduce coking.

The main process study objectives were to evaluate the existing operations, make recommendations to improve existing operations, and suggest potential improvements in vacuum tower equipment design. The main tower operational challenge is the ability to meet the product specification, especially on the HVGO color (Heavy Vacuum Gas Oil), when operating in deeper cut vacuum condition after the recent revamp. Before the revamp the tower operation was about 40 mm Hg and afterward about 20 mm Hg.

The study aimed to reduce the impurities (heavy metal and other heavies content) in the HVGO, so that the color of this HVGO meets the client's specification. This column is unique in that it has a LVGO draw and pump around (Light Vacuum Gas Oil), a HVGO draw and pump around, a Slop Wax draw and pump around and a wash bed. With an additional bed below the HVGO one would not expect color problems.

Steps of Revamp

1. Investigate Previous Operation
2. Simulate Original Heat and Material Balance and Tune Model
3. Simulate Current Operation and Tune Model
4. Rate Existing Tower
5. Recommend Proposed Changes as Required

1. Investigate Previous Operations

There are over 400 published cases of refinery tower incidents. The largest number of cases is for vacuum towers - over 86 cases. Of these cases, 27 included equipment damage, and of these 9 were a result of water induced pressure surges. A lesson to be learned is that possibly one-third of the causes of damage in vacuum towers can be prevented by design and operating procedures that prevent water from entering the tower. A joint design/operations hazard and operability review (HAZOP) should focus on the listed potential problem areas. (1)

2. Simulate Original Heat and Material Balance

The process simulation was carried out using PRO/II, feed modeling and VLE (vapor liquid equilibrium) know-how. PRO/II has excellent VLE capabilities and packages.

Vacuum tower feed modeling is complex and often requires simulation of the transfer line, flash zone, and overflash as separate flash vessels. The PRO/II is optimized to match actual plant operating conditions by using separate flash stages to represent the transfer line, flash zone, and wash bed collector tray. This increases the complexity of the model, while resulting in improved wash bed accuracy.

Many times in a crude and vacuum tower, it is best to back blend the feed from the products. The products are more easily characterized than the feed stream. The products from the simulation can then be compared to the original distillation inputs for a cross check of the simulation's accuracy.

3. Simulate Current Operation

The simulation of the current operation is critical in vacuum towers. The actual amount of overflash, heavies that are entrained with the vapor to the wash bed, is important to quantify. With out the correct amount of overflash specified, the liquid to the wash bed can be too low. If the liquid to the wash bed is too low a dry area in the middle of the bed can develop leading to premature coking of the bed. A good accurate simulation of the current operation is required.

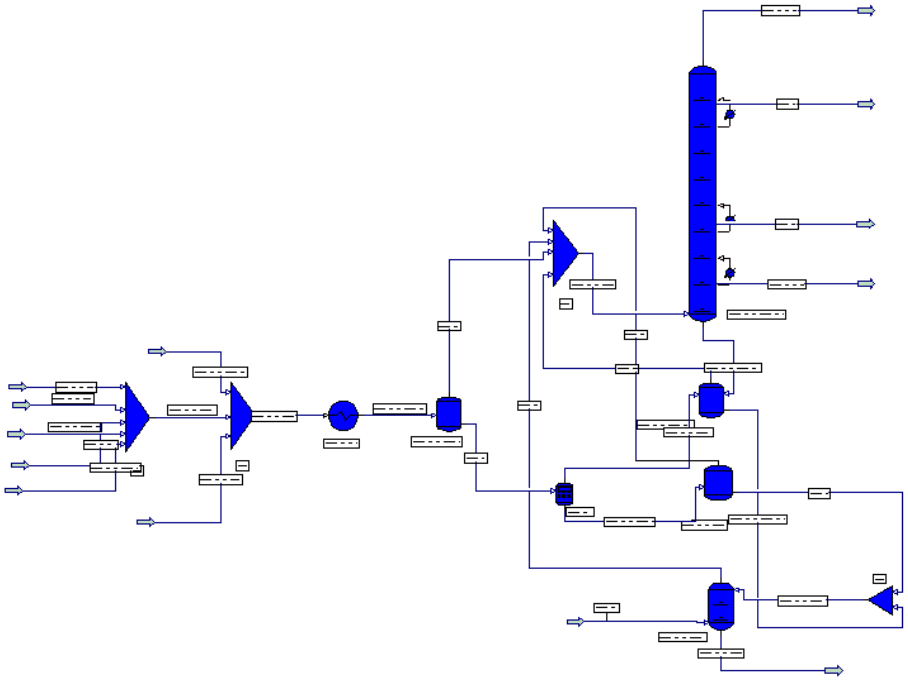

Figure 4: PRO/II Model of Current Operation

4. Rate Existing Column

With the two tuned models, the column can now be rated for the new conditions. The rating will determine if the existing equipment can be used in the new operation. Hydraulic calculations can be evaluated and capacity reviewed.

5. Propose Changes if Required

With the collaboration from the operation engineering team and simulation team, the following list of considerations and recommendations for Vacuum Tower revamp were developed.

1. Replacement of Existing Wash Bed and Rerate Spray Nozzle
2. Redesigned Inlet Feed System To Reduce Entrainment.
3. Redesigned Collector Tray
4. Wash Bed Oil Flow Rate Change
5. Replacement of Slop Wax Pump around Spray Nozzles with a Distributor

The operations team decided to implement the recommendations in steps. This is a good practice which can identify which parts of the revamp had the greatest impact. (3) In Phase One the following items were implemented in July 2004.

1. Replace the wash bed spray nozzles for increased flow from the tuned model – approximately 25% increase.

2. Replace the eight year wash bed Mellagrid.

The results were not very positive. The HVGO color was still less than desired.

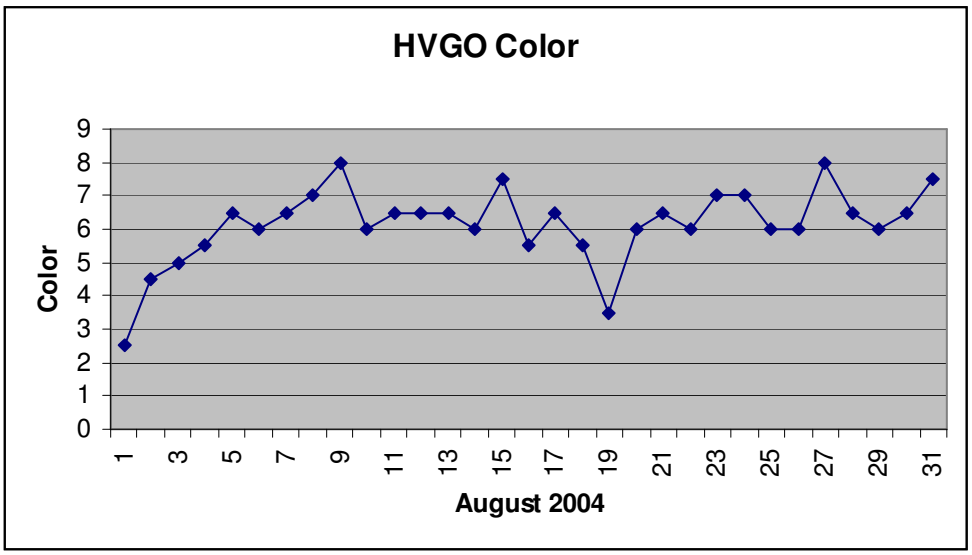

Figure 5 HVGO Color for August 2004

The operations team installed Phase Two in March 2005 which included;

1. Replacing the slop wax spray nozzles with a distributor to reduce entrainment to HVGO. With the close spacing between the slop wax bed and the HVGO bed, there was a concern the spray nozzles were entraining slop wax into the HVGO bed at the deeper vacuum.

Phase two showed improvement in the HVGO Color. The attached graph is data from January 2004 and July 2005.

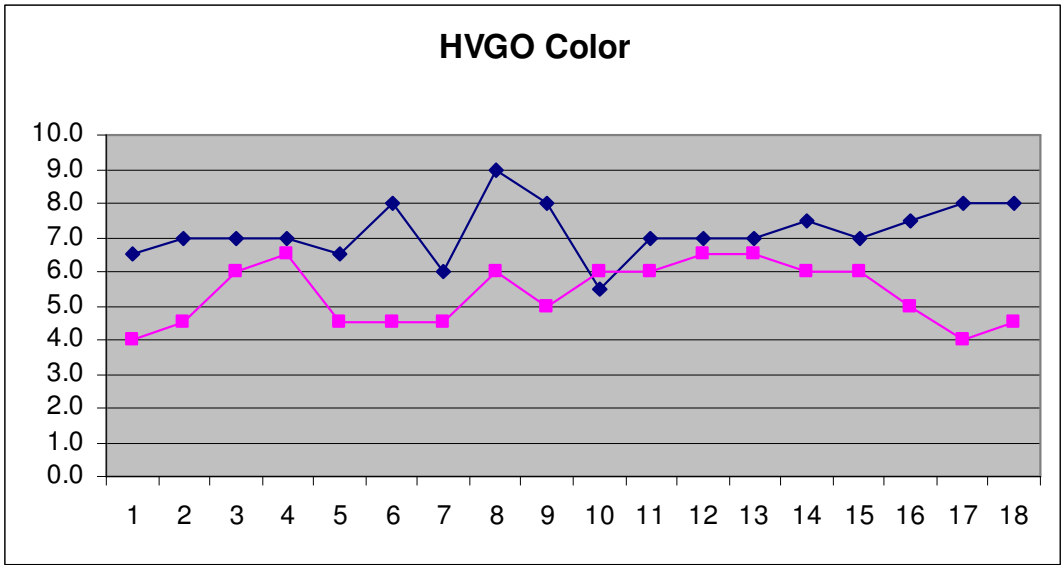

Figure 6 HVGO Color for January 2005 and July 2005

Guidelines for the Field

From these two case studies some general guide lines for the field can be developed. Steps for a revamp may include;

1. Investigate Previous Operations

There is large database of knowledge in the industry. Investigate your application and review what challenges other people have encountered. There is a vast amount of information on the web. Find items such as; a.) VLE Data, b.) Tray Efficiencies, c.) Normal Designs and d.) Challenges. You need to make industry friends and be a friend so that people feel comfortable sharing information with you.

2. Simulate Original Heat and Material Balance and Tune Model

Most licensors have good heat and material balances developed from the plant actual operations data. With the original heat and material balances, VLE data and tray efficiencies can be verified. You should be able to match the original heat and material balance simulation quickly.

3. Simulate Current Operation and Tune Model

This can be a challenge. Typically many more hours are spent on the current operation than the original heat and material balance simulation. Pressure, flow and temperatures measurement are often issues. Data reconciliation needs to be addressed. A test run may be required accurately collect data.

If you cannot match the original heat and balance and the current operation it is strongly recommended that you not use this model for a revamp or tower ratings. If you are trying to draw a line between three points and you are unsure of two of the points, do not be surprised if your line is not drawn correctly.

4. Rate Existing Tower

Rate the existing tower for correct number of trays, reflux to stages ratio, and tray or packing hydraulics. Use hydraulic analysis of simulated internal vapor and liquid flows. Determine if the existing tower with operational changes meet the desired targets. Options include pressure changes, reflux rate changes, and if you have multiple feed points optimize the feed tray.

In one troubleshooting case a DeButanizer was not meeting the desired specifications. The tower was simulated and operations reviewed. The Tower had enough stages, reflux, and hydraulic capacity. The overhead sample was sent to an independent laboratory for a review. The problem was identified as a gas chromatograph issue. Correct tower rating utilizing distillation software can be a great troubleshooting and design tool.

5. Recommend proposed changes if required

From the tuned model design and the tower ratings, new equipment specifications if required can be developed. One recommendation is to modify in a step wise fashion, with the highest return on investment items implemented first.

Guide Lines for Stage Efficiencies and Hydraulics

Tray Efficiencies

Typical industry tray efficiencies might be similar to these for cross flow trays. Do research for your type of tray because not all tray efficiencies are similar. (5)

Demethanizer	65%	Air Separation	90%
Deethanizer	70%	C_2 & C_3 Splitter	85%
Depropanizer	75%	Stabilizer	80%
Debutanizer	80%	Hydrocarbon/Water	15%
Depentanizer	85%	EB/Styrene	90%
Low alpha Aromatics	80%	Alcohol - Water	75%
High alpha Aromatics	70%	Amine Contactor	33%
Crude Tower	50%	Ethylene Quench Tower	50%

An interesting observation can be developed from the review of the table. Low relative volatility gives higher tray efficiencies and the converse. In an ethane/ethylene splitter the relative volatility (difference in boiling points) is low, but the per stage efficiency is high. Because the relative volatility is low, one needs many stages, but each stage will have high efficiency. A C2 Splitter simulation may require 100 stages to separate the products, but in the field you may have a tower with 125 trays.

Hydrocarbon and water have high relative volatility, but low stage efficiency. A simulation may require 5 stages to separate the products, but in the field you may have a tower with 25 trays.

Hydraulic rates have an effect on tray efficiencies. Uneven liquid to vapor ratios reduce tray efficiencies. Very high hydraulic rates reduce efficiencies due to flooding and very low hydraulics rate decrease efficiencies to weeping.

Hydraulic recommendations are not to exceed 83% jet flood. Jet flood is the tray vapor limitation. It is a function of the froth on the tray. When the froth touches the next tray flooding begins.

Hydraulic guidelines are not to exceed 80% down-comer back up. Down comer back up is the liquid limitation of the tray. If the jet flood is low, you can raise the down comer back up liquid rate higher. Guidelines are not as strong as recommendations.

Packing Efficiencies

Packing has the similar observation that low relative volatility gives higher efficiencies and the converse, along with the hydraulic effects on efficiencies. With packing very high hydraulics rate decrease efficiencies dramatically and recommendations are not to exceed a liquid maximum flow of 50 m^3/m^2 of packing.

In packing, liquid to vapor densities are important. If the liquid to vapor density ratio is less than 20 there can be a back mixing effect which reduces the actual field efficiency. For adsorbing and stripping towers the ratio can be maintained at higher pressures. For distillation this ratio is difficult to achieve above 10 bar (150 psig).

As packing surface area increases, packing efficiency increases and the capacity decreases. Normally this is the case for packing, efficiencies and capacities are inversely related. For structured packing, a 60 degree crimp angle decreases liquid holdup and residence time compared to 45 degrees.

Aqueous systems or the presence of a second aqueous phase can result in poor wetting of the packing area. Rivulet flow instead of film flow reduces the wetted area. Efficiencies can be less than half of expected. (2) Gauze packing can be used to help efficiencies in aqueous systems.

Guide lines for packing hydraulics include avoiding bed heights taller than 6 meters (20 ft). The rule of thumb is a maximum of 15 ideal stages per bed. The most common reason for loss of efficiency with operating packed columns is poor distribution. One cannot compensate for poor distribution with more packing. An additional point is that higher surface area packing requires more distribution points.

Challenges for taking simulations to the field

One process engineer develops a process simulation. A second process or mechanical engineer develops the hydraulics calculations. A third mechanical engineer designs the trays. They can be employed by two different companies in three locations. Each assumes the other engineer has adequate safety margin in his design. It is very important that there is adequate communication among the designers.

Conclusions

Process simulation is a powerful chemical engineering tool that has wide spread use in the chemical processing industry. PRO/II is the most used process simulation tool for actual tower design. Working steps like correct selection of actual field efficiencies, choosing appropriate vapor and liquid equilibrium (VLE) data, feed modeling, and analysis of actual hydraulic behavior all have a strong influence on the accuracy of the model's results. Developing guidelines for each of these steps is very important to a practicing engineer

References

1. Kister H Z, "What Caused Tower Malfunctions in the Last 50 Years?", Trans IChemE, Vol 81, Part A, January 2003

2. Bravo, Jose, de Villiers, Waldo, "Distillation Packing Efficiency" presented at the 2004 AIChE Spring Meeting

3. Kolmetz K, Zygula T, "Resolving Process Distillation Equipment Problems", Prepared for The 5th Annual Regional Olefins Conference, October 31st - November 3rd, 2000, Johor Bahru, Malaysia

4. Kister, H. Z., Neves, S. B., Siles, R. C., & Lima R. C., "Does Your Simulation Reflect the Real World", AIChE Spring National Meeting, Houston, Texas. March 19-23 1997

5. Kolmetz, Karl, Summers, Daniel R, Ng, Dr. Wai Kiong, Pitt, Ryan, "Strategies of Successful Distillation Equipment Revamps Part 1: Determining Existing Distillation Equipment Capacities" , DISTILLATION 2005, 2005 Spring AIChE Meeting, Atlanta, Georgia, April 10-14, 2005

6. Kolmetz, Karl, Sloley, Andrew W. ,. Zygula Timothy M, Faessler Peter W., Ng, Wai Kiong, Senthil K. Lim, Tau Yee, "Designing Distillation Columns for Vacuum Service", The 11th India Oil and Gas Symposium and International Exhibition, 6-7 September 2004, Grand Hyatt, Mumbai, India,

7. Kolmetz, Karl, Sloley, Andrew W. ,. Zygula Timothy M, Faessler Peter W., Ng, Wai Kiong, "Design Guidelines for Distillation Columns in Fouling Service", American Institute of Chemical Engineers, The 16th Ethylene Producers Conference, Section T8005 - Ethylene Plant Technology, Advances in Distillation Technology for Ethylene Plants, 26 April 2004, New Orleans, Louisiana, USA